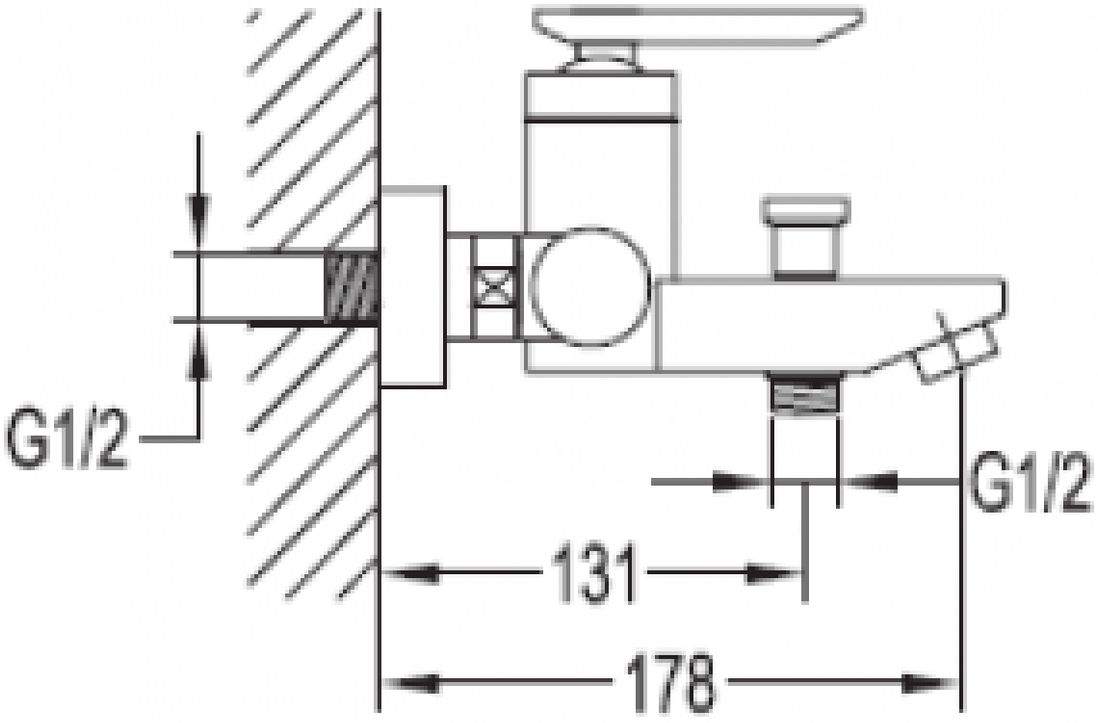
G1/2
G1/2
131
178

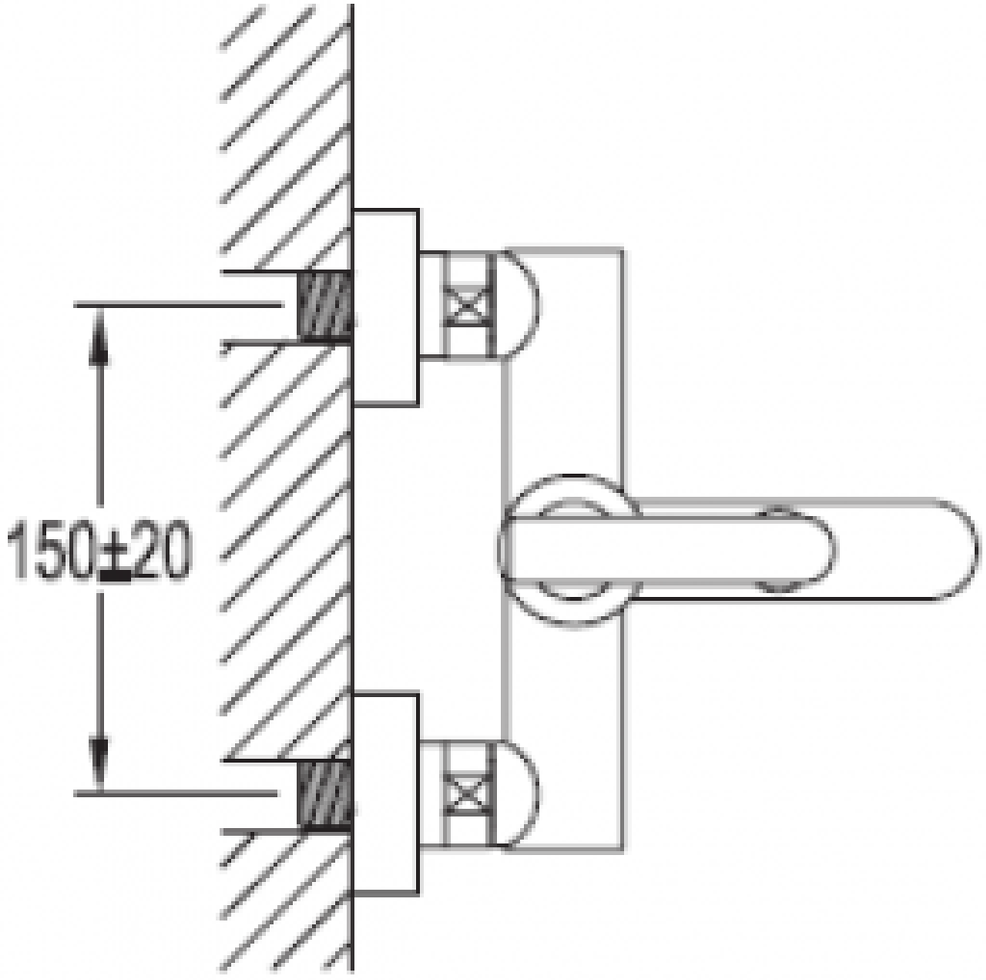
150±20