ARTE LAMP

ASSEMBLY INSTRUCTION
ИНСТРУКЦИЯ

A
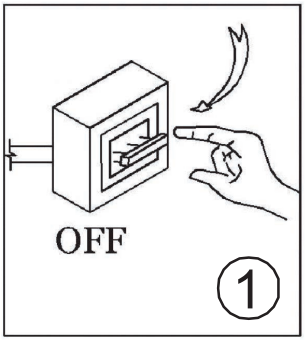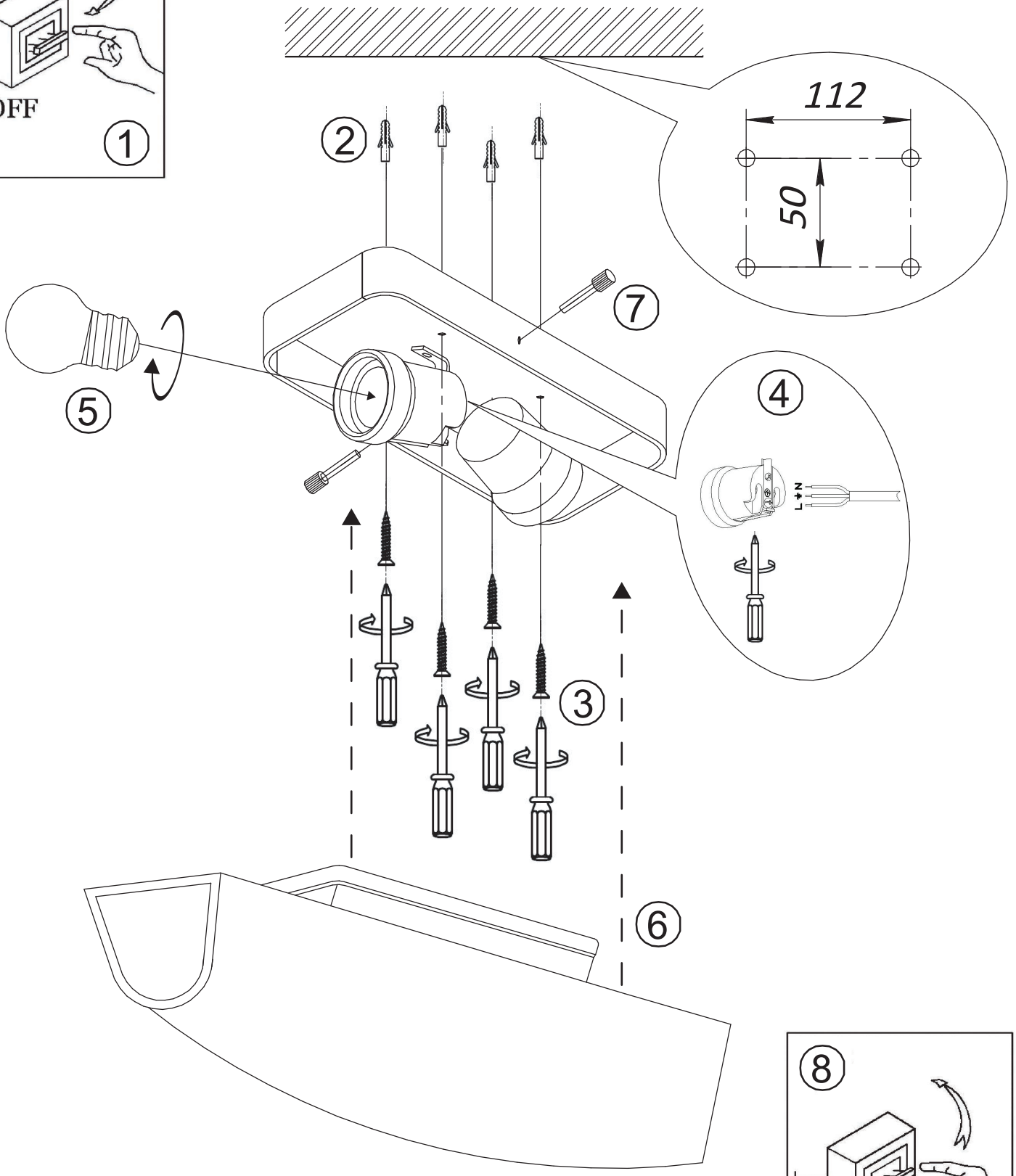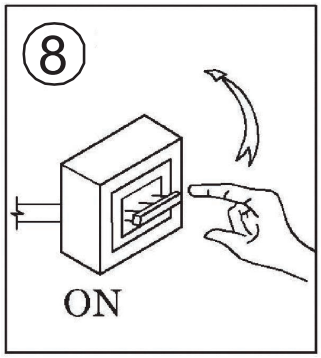
A6940AP-2WH